SC30 Satcom Adapter Fixing Dimensions

For help & information
email: sales@scanstrut.com
tel: +44 (0) 1392 531280

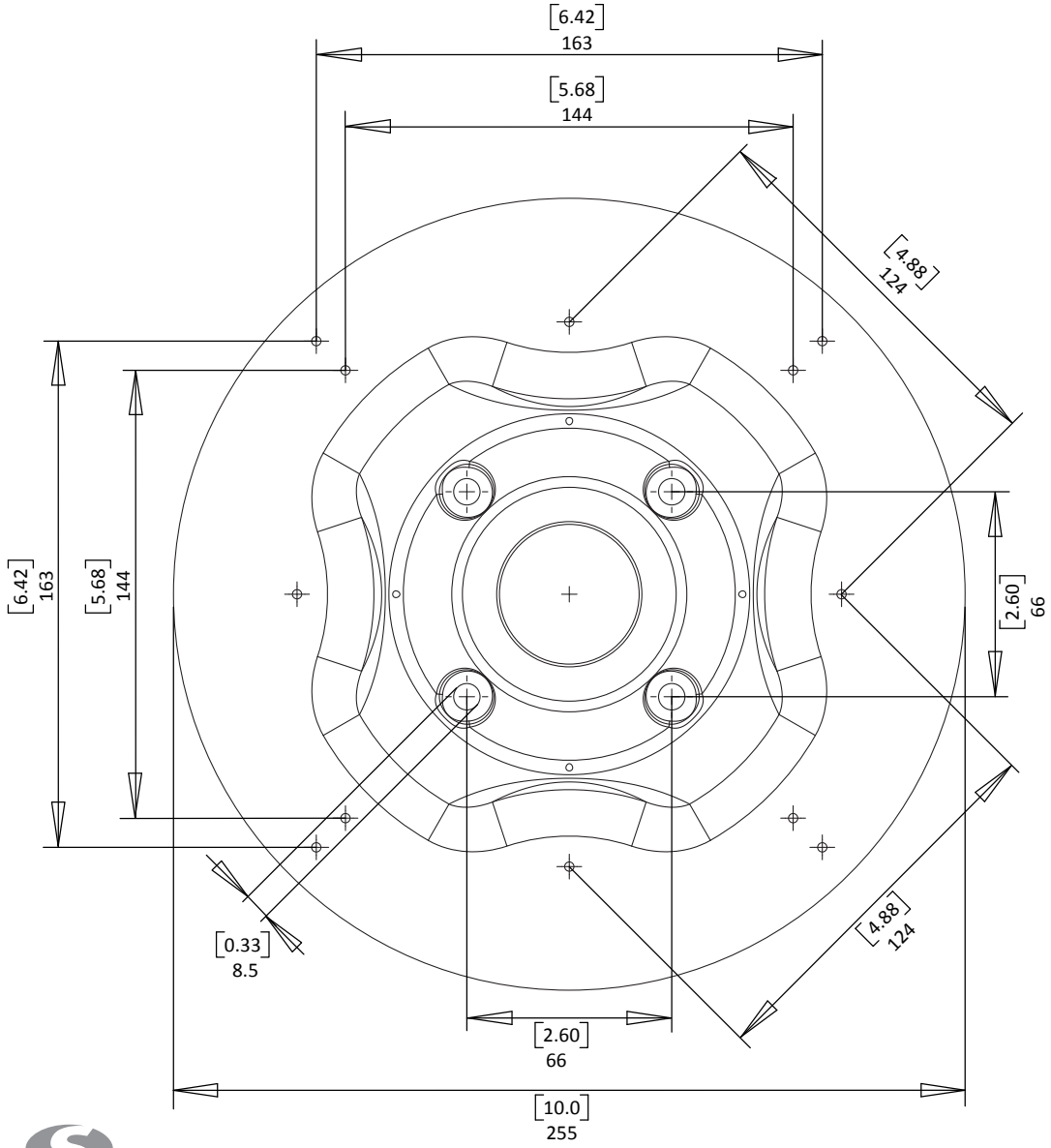

ALL SATCOM FIXING POSITIONS **ARE NOT** PRE DRILLED

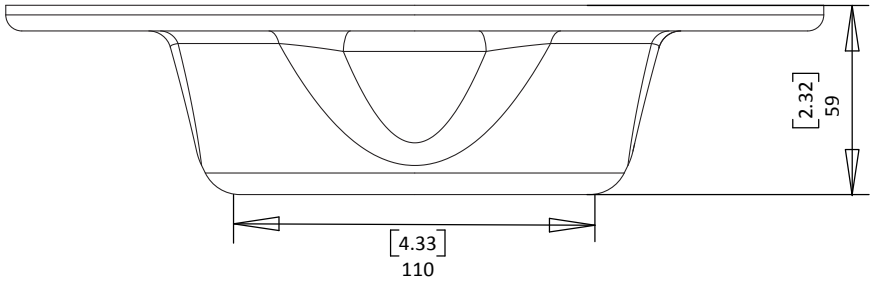

MATERIAL: 8mm COMPOSITE GRP
FINISH: WHITE GEL COAT

SCANSTRUT